BSES

POWERING DELHI
EMPOWERING CONSUMERS

Great Place To Work. Certified DEC 2024-DEC 2025 INDIA

Digitization Roadmap for Utilities

BSES: 22 years of serving the National Capital

Presenter: **Abhishek Ranjan, CEO**
BSES Rajdhani Power Limited

DISCOM Modernization Journey

Evolving Roles of Distribution Utilities

Past roles

- Voltage & Power Factor Monitoring
- Outage Response & Supply Continuity
- Asset Maintenance
- Billing & Revenue Collection
- Load Growth Management
- Straightforward Capex Calculations

Emerging and Future Roles

Grid Operations and Reliability
• Active voltage optimization and reactive power management using inverters, BESS, and smart transformers
• Predictive outage management using real-time data, digital twins, and automated fault isolation

Energy Markets and Ecosystem
• Operation of local energy markets including peer-to-peer and community microgrid trading
• Utility role as a neutral market facilitator

Digital Infrastructure and Governance
• DERMS and ADMS integration with open interoperability standards
• Cybersecurity, data governance, and AI-supported operationa

DER and Flexibility Management
• Integrated Distribution Resource Planning to manage DER and EV-driven load variability
• Localized flexibility procurement and automated demand response programs
• Prosumer participation and system cost optimization through demand flexibility

BSES

Indian DISCOM's 2030 Journey

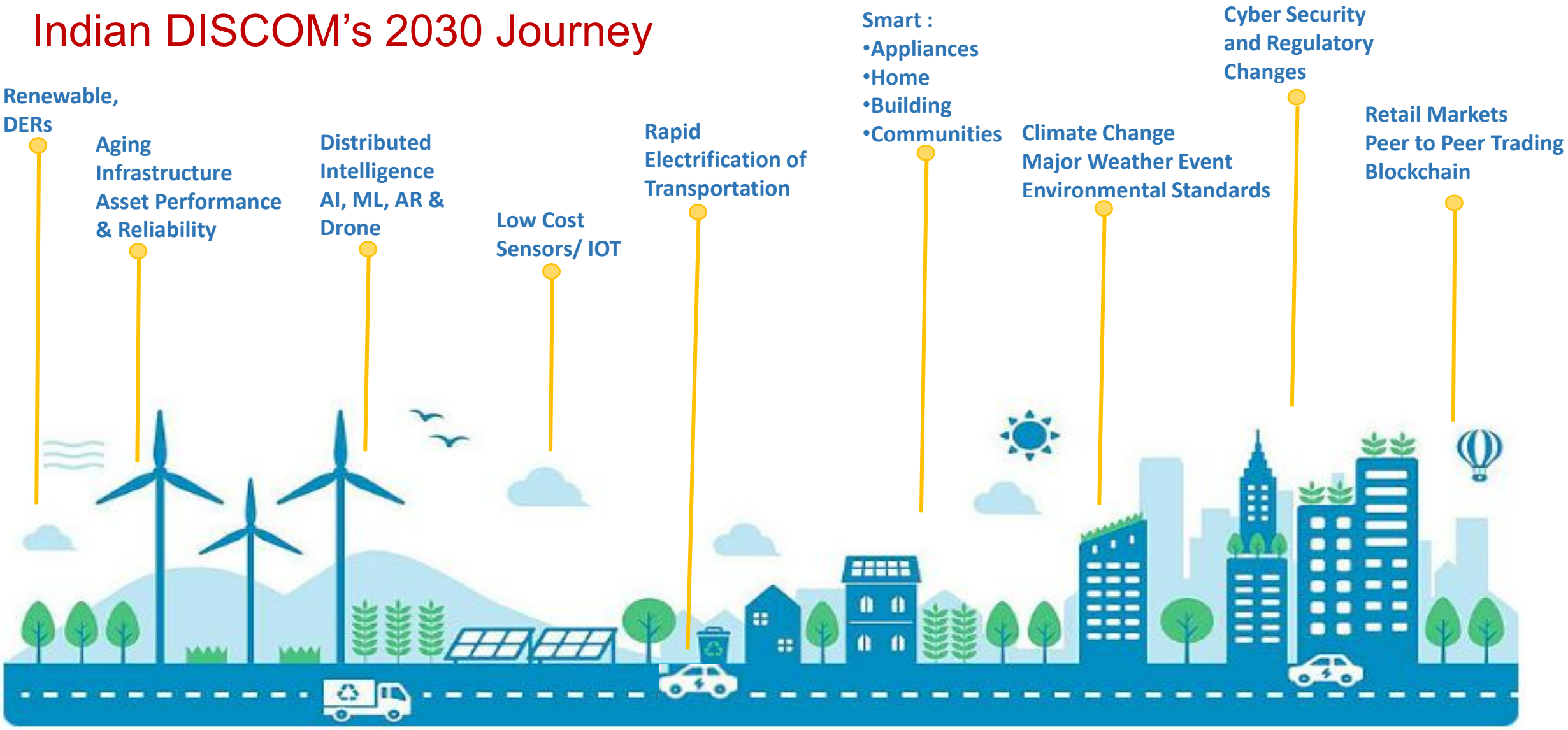

Asset Operations	Network Operations	Device Operations	Customer Operations	Customer Experience

BSES

Focus areas: Future State of BSES Rajdhani Power Limited (BRPL)

Unified OMS

- Outage Detection and Management
- Outage Lifecycle Tracking
- Crew mgmt, Customer alerts
- Cross System Coordination

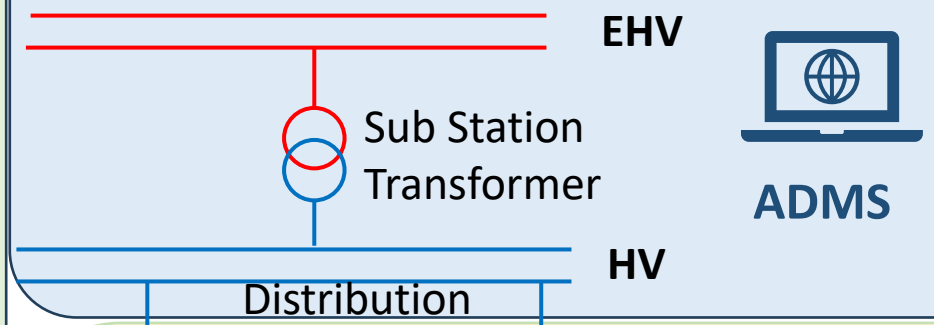

ADMS

- SCADA Controlled
- Network Modelling
- Load Flow Analysis
- Fault Analysis
- Demand Forecast
- FLISR Enabled
- Capacity Monitoring

Digital Twin

- LV n/w visualization
- Planning insights
- Asset Management
- BTM monitoring

Security Operations Center

OT and IT cyber security

Security Operations Center

Low Voltage IOT sensors

BRPL's present readiness

Integrated Resource Planning

Study Process

Model

Outputs

Forecasting module (net system and customer level)

- Demand
- DER adoption
- DER behaviour

Present readiness at BRPL:

- AI based system level demand forecast
- Bottoms-up feeder level forecast

Distribution network optimization

- Network voltages, current limits
- DR and DSM constraints

Present readiness at BRPL

- CYMDIST based modeling

Power purchase optimization

- Hourly cost of operations
- System marginal costs

Present readiness at BRPL

- PLEXOS for economic dispatch

Marinal costs and DSM use schedule

Use-case from integrated systems planning of PPK Cluster at BRPL

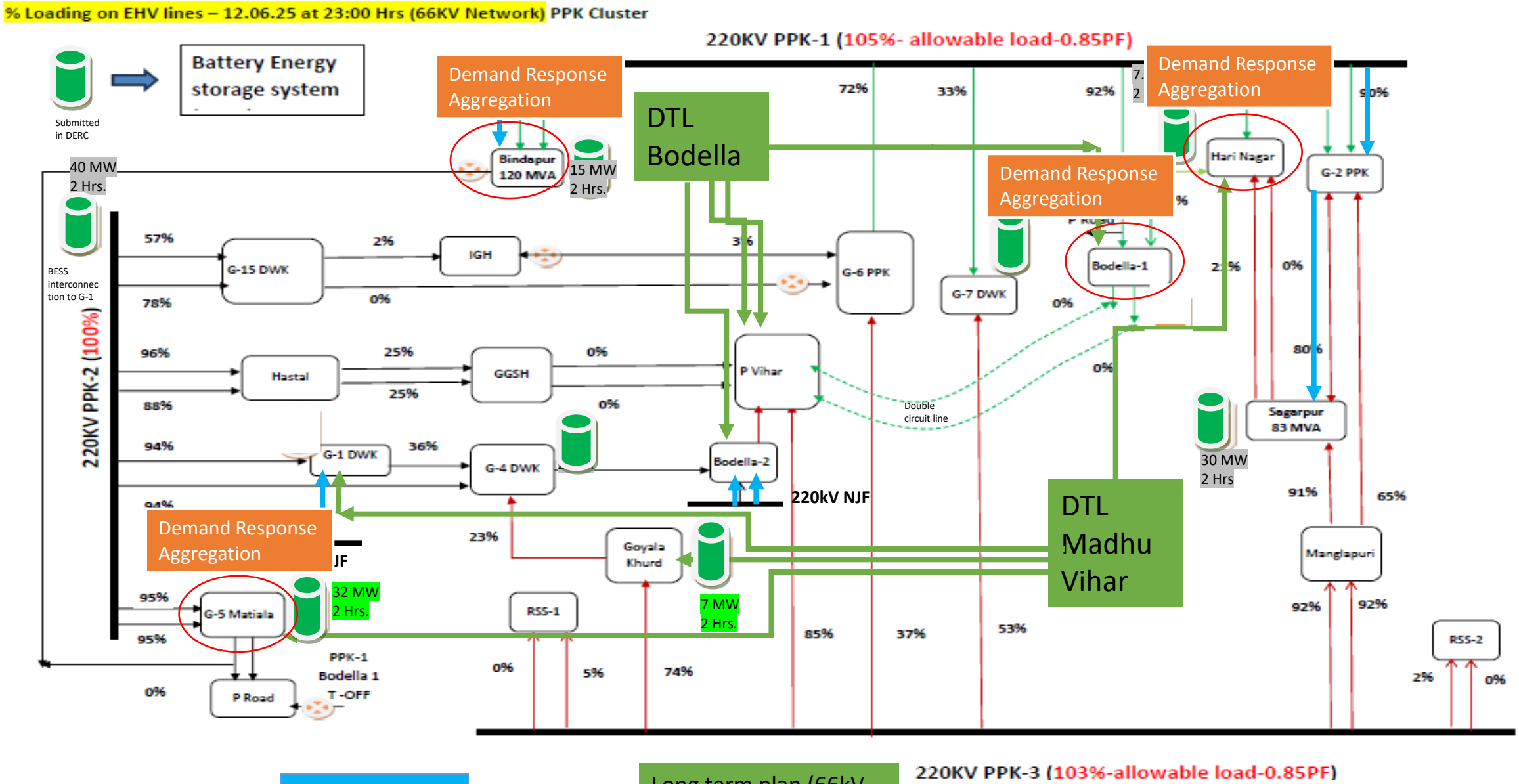

BSES

Short term plan (New Feeder)

Long term plan (66kV Double circuit)

Thank You

BSES

www.bsesdelhi.com

BSES Rajdhani Power Limited
BSES Bhawan, Nehru Place,
New Delhi – 11 00 19

BSES Yamuna Power Limited
Shakti Kiran Building, Karkardooma,
New Delhi – 11 00 32

@bses @bsesdelhi @bsesdelhi @bsesdelhi @bsesdelhiofficial